AUTOLIFT

INSTRUCTION MANUAL

# LIFT

DEVICE

ALSF AUTOLIFT SPACE FRAME PIUMA™

## BAS Series BAS-1150 – BAS-1395

## BAI Series: BAI-1401

MODELS

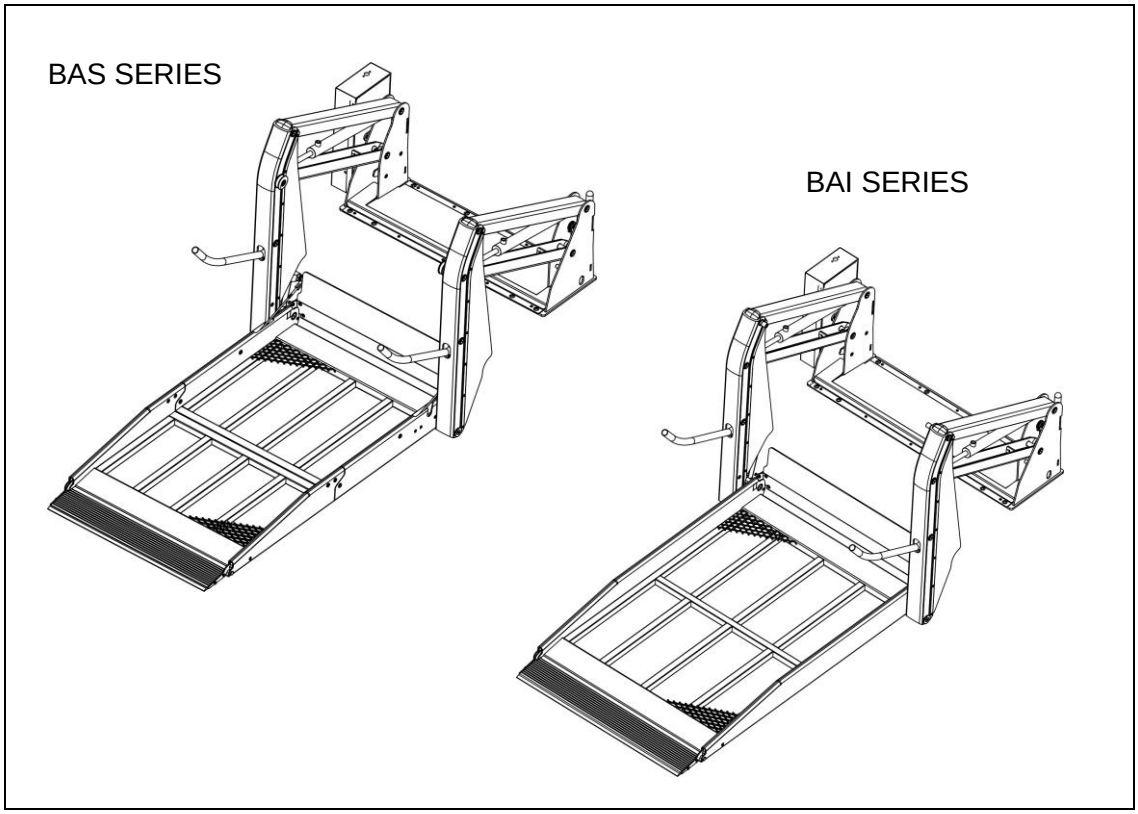


***ORIGINAL INSTRUCTIONS***

**00**

REVISION

PATENT PENDING

**2015**

YEAR

**1. GENERAL WARNINGS ..... 3**
1.1 MANUFACTURER ..... 3
1.2 MARKING ..... 3
1.3 DECLARATION OF CONFORMITY ..... 4
1.4 IDENTIFICATION OF OPERATORS ..... 5
1.5 STRUCTURE AND USE OF THE MANUAL ..... 6
1.6 LIST OF ENCLOSURES ..... 7
1.7 SAFETY – GENERAL RULES ..... 8
**2. GENERAL DESCRIPTION ..... 10**
2.1 COMPONENTS ..... 10
2.2 DIMENSIONS ..... 11
2.3 TECHNICAL DATA ..... 12
**3. FIELD OF USE ..... 13**
3.1 INTENDED USE ..... 13
3.2 IMPROPER USE ..... 13
**4. SAFETY DEVICES ..... 14**
**5. WARNING SIGNS ..... 15**
**6. INSTALLATION ..... 16**
6.1 RECEIPT AND INSPECTION ..... 16
6.2 STORING AND NON-USE OF THE LIFT ..... 16
6.3 TRANSPORT ..... 17
6.4 HANDLING ..... 18
6.5 INSTALLATION ON A VEHICLE ..... 18
**7. USE ..... 19**
7.1 NORMAL USE ..... 19
7.2 USE IN EMERGENCY CONDITIONS ..... 21
7.2.1 UP - CLOSING ..... 21
7.2.2 OPENING - DOWN ..... 22
**8. CLEANING ..... 23**
**9. MAINTENANCE ..... 24**
9.1 PERIODIC INSPECTION ..... 24
9.2 FREQUENCY OF CONTROLS ..... 25
**10. DEMOLITION AND DISPOSAL ..... 26**
**11. TROUBLESHOOTING ..... 27**
**12. WIRING DIAGRAM ..... 29**
**13. HYDRAULIC DIAGRAM ..... 30**
**14. SPARE PARTS ..... 31**

## 1.1 MANUFACTURER

**AUTOLIFT SRL**

Via Trentin 8 – 46020 Pegognaga (MN) - Italy

Tel. +39 0376 550375 – info@autoliftsrl.com

## 1.2 MARKING

The lift device is manufactured in compliance with the relevant EC directives applicable on the date of entering the market. Considered a "medical device" pursuant to article 2, point 1), letter a), first paragraph of directive 2007/47/EC, the device carries a specific identification plate which, in addition to the specific technical data also includes the CE marking, guarantee of the compliance of the device to the directives/standards referred to the enclosed Declaration of Conformity.

The plate, a facsimile of which is shown here, is stamped with the data indicating the specific model and unit.

| | |
|---|---|
| **CUSTOMER NAME:** | |
| **INSTALLER NAME:** | |
| **DATE OF INSTALLATION:** | |
| **SERIAL NUMBER:** | |

**IT IS PROHIBITED TO REMOVE OR TAMPER WITH THE IDENTIFICATION PLATE.**

## 1.3 DECLARATION OF CONFORMITY

A copy of the declaration of conformity is enclosed with the lift, signed and completed with all specific data.

**EC DECLARATION OF CONFORMITY (FAC-SIMILE)**

Original pursuant to directive 2007/47/CE – Annex VII

The undersigned manufacturer:

**AUTOLIFT SRL**

Via Ferri 3 – 46020 Pegognaga (MN) - Italy

Tel. +39 0376 550375– info@autoliftsrl.com

Declares under his own responsibility that the medical device:

NAME.....**LIFT**

MODEL .....**PIUMA BAS - BAI**

SERIES.....

CLASSIFICATION.....**Class 1**

YEAR OF MANUFACTURE .....**2015**

complies with the provisions of the following EC Directives:

| | |
|---|---|
| **2007/47/EC** | Medical Devices Directive |
| **2004/108/EC** | Electromagnetic Compatibility Directive |

and the following harmonised standards have been applied:

| | |
|---|---|
| **UNI EN ISO 10535:2007** | Hoists for the transfer of disabled persons – Requirements and test methods |
| **UNI CEI EN ISO 14971:2012** | Medical Devices - Application Of Risk Management To Medical Devices |

Pegognaga, (date)_____

(The Legal Representative)

_____

Gabriele Ovi

## 1.4 IDENTIFICATION OF OPERATORS

The lift user is the physical or legal person who purchases it and has it operated by an operator.

The operator, also defined as the **accompanying person**, is the person who uses the device.

Operators working with devices designed to transport persons with motor deficiencies or disabilities must be competent to act in all situations; they must always be mentally aware; they must comply with the physical and mental requirements for ensuring sufficient reactivity in the event of an emergency or a hazard. They shall therefore not only acknowledge all the details given in this manual but shall obligatorily possess the following characteristics.

**PHYSICAL**: good eyesight, hearing, coordination, ability to safely perform all the functions required to use the lift, no disorders or debilitating or disabling infirmities caused by the intake of substances altering the person's emotional state (e.g. drugs and/or alcohol).

**MENTAL**: ability to understand and apply the established rules and safety precautions; they shall be attentive, use common sense to ensure their own safety and that of others; they shall be willing to correctly and responsibly perform the tasks of assistant and operator during the transport, loading and unloading of disabled and other passengers.

**EMOTIONAL**: the operator must be calm and able to cope with stress and use common sense over his own physical and mental conditions; he must be able to manage normal and abnormal situations, understanding his own limits and, at the same time, how to deal with an emergency.

**TRAINING**: this manual, and diagrams and graphs attached, the hazard warning plates and stickers applied to the electro-hydraulic lift must be read, studied and fully understood; the operator must be familiar with the use of the controls and the lift movements, having performed all tests (without loads) required to learn all the operating phases.

**TASKS AND RESPONSIBILITIES**: in this context we refer only to the operator's tasks concerning the use of the lift, which include switching on the power circuit, moving the various parts, assembly and removal of any optional parts, and maintenance. The operator must therefore be fully familiar with the safety regulations and relative devices, the use of the controls and the manual emergency devices.

The operator is personally responsible for the use of the lift and its correct operation, maintenance, the handled load and all actions which are performed within the above-listed tasks.

If any situations occur which could compromise the physical and mental state of the transported person, following the non -compliance or poor knowledge of the operator, he shall personally be civilly and criminally liable towards the injured party.

This applies also to any tampering or modifications by the operator of parts or components of the lift which no longer guarantee its safety and reliability for the transported persons.

Autolift Srl declines all liability in the event of such situations.

The user is responsible for distributing this manual to all staff working with the lift.

In addition to complying strictly with the instructions given in this manual, operators shall not use the lift and shall report directly to their managers, or if they do not have one, directly to the manufacturer AUTOLIFT srl, concerning any shortcomings or potentially hazardous situation which may occur.

## 1.5 STRUCTURE AND USE OF THE MANUAL

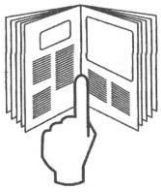

**USERS AND OPERATORS MUST HAVE READ THIS MANUAL PRIOR TO PUTTING THE LIFT INTO SERVICE.**

This manual aims to provide users and operators with all the information they require to ensure that they are able both to use the lift appropriately and are able to manage it as autonomously and safely as possible.

Before performing any operations on the lift, users and operators must carefully read the instructions given in this publication.

In the event of doubt over the correct interpretation of the instructions, contact the AUTOLIFT srl technical department to obtain the required clarifications.

This manual is an integral part of the lift, it must be kept safely by the purchaser and made available for use by the operators.

The contents of this manual comply with the Directive 2007/47/EC and were drafted following the guidelines given in UNI 10893:2000. They also comply with the requirements of UNI EN ISO 10535:2007.

This manual has **36** pages, including the cover, and enclosures (see para.1.6).

Data and drawings are indicative only; with a view to the continuous development and updating of its products, the manufacturer may modify the contents without notice.

It is prohibited to disclose, edit or use this manual for any other purposes.

In drafting the manual, we have chosen to use only a few yet clear pictograms to draw the reader's attention to important concepts and to make consultation simpler and more immediate.

THE INDICATIONS MARKED BY THIS SYMBOL REPRESENT A POTENTIAL HAZARD, WITH THE RISK OF PHYSICAL DANGER FOR THE USERS.

THE INDICATIONS MARKED BY THIS SYMBOL ARE DEEMED PARTICULARLY IMPORTANT FOR THE OPERATION OF THE LIFT.

THE INDICATIONS MARKED WITH THIS SYMBOL ARE IMPORTANT FOR COMMUNICATION BETWEEN THE MANUFACTURER AND THE USER.

## 1.6 LIST OF ENCLOSURES

Declaration of conformity

## 1.7 SAFETY – GENERAL RULES

When using the hydraulic lift, a hazardous situation may be caused by parking the vehicle on a slope.

Use the lift with the vehicle parked on flat ground

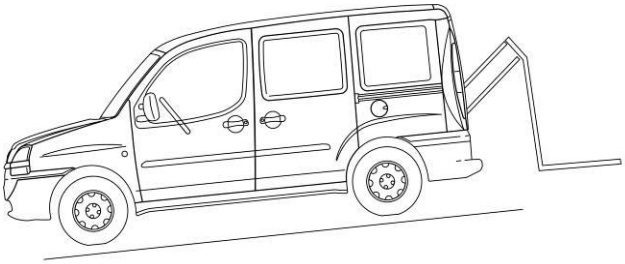

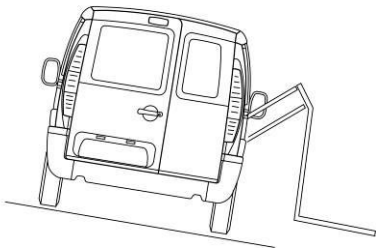

The vehicle must always be parked safely with the emergency brakes on, before starting to work the lift.

Examine the hydraulic lift carefully before each use. If there are any hazardous conditions or if you notice unusual noises or movements, do not use the lift and contact an Autolift agent or authorised workshop for the necessary inspections and repairs.

Read and comply with the labels and warning symbols fixed to the hydraulic lift or near the loading area of the vehicle used to transport wheelchairs.

When using the hydraulic lift, the occupant of the wheelchair should where possible face outwards; i.e. with the larger wheels facing the vehicle.

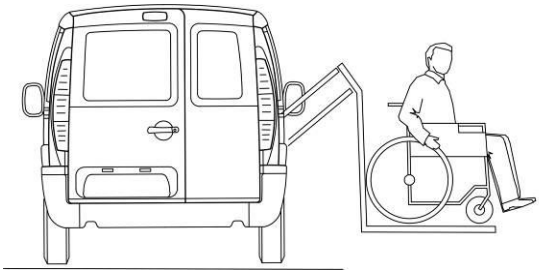

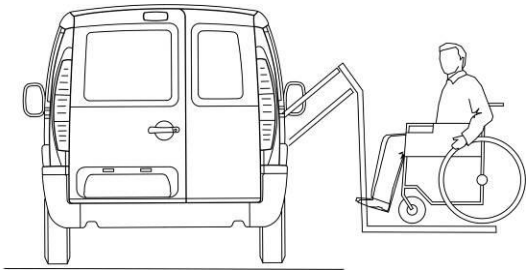

Make sure that the wheelchair is placed securely on the platform and does not extend over the edge or interfere with the operation of the anti-roll device.

Do not work the platform with a load of over 350 kg.

**DO NOT PLACE ARMS, LEGS OR CLOTHING NEAR THE MOVING OR PROTRUDING PARTS OF THE PLATFORM.**
**RISK OF CRUSHING AND SHEARING**

Unauthorised persons must not stand nearby during the use of the lift, and must not stand between the vehicle and the platform, even for quick checks with the platform at a standstill. These checks and adjustments must be performed exclusively by authorised Autolift staff.

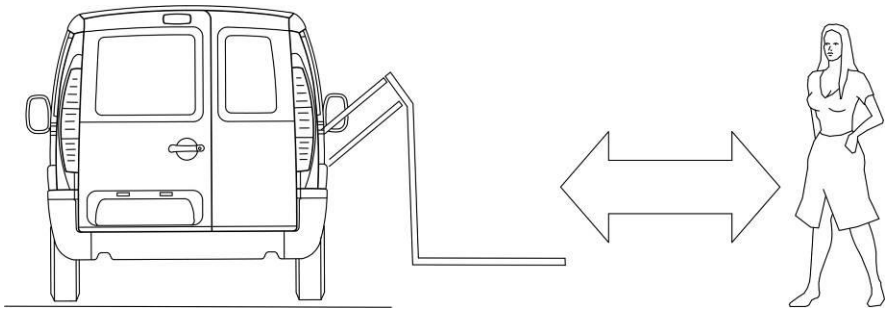

## 2.1 COMPONENTS

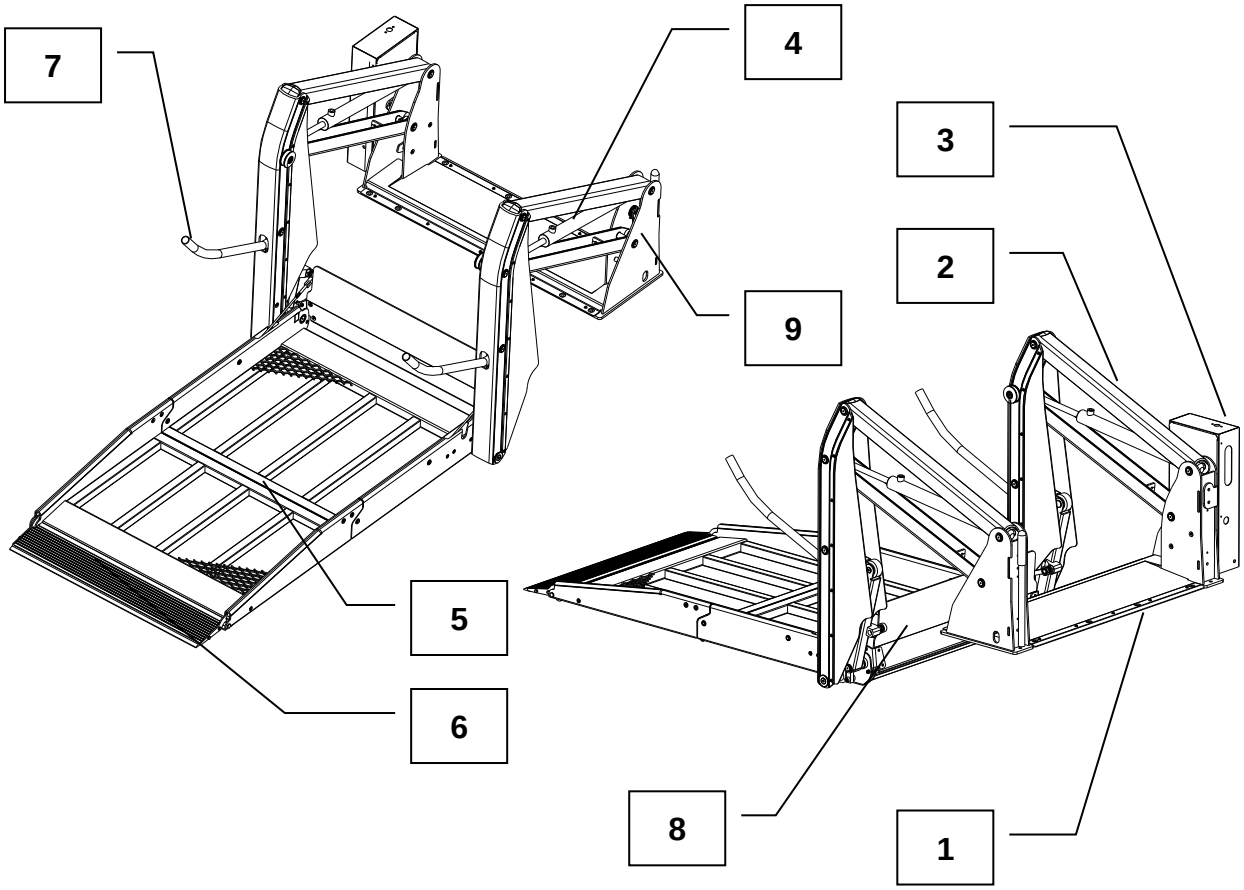


| | |
|---|---|
| **1** | Vehicle fixing base |
| **2** | Jointed drive arms |
| **3** | Hydraulic power unit |
| **4** | Drive cylinders |
| **5** | Load platform |

| | |
|---|---|
| **6** | Front flap |
| **7** | Gripper handles |
| **8** | Rear flap |
| **9** | Safety microswitch and cam |

The drawing shown represents all models

## 2.2 DIMENSIONS

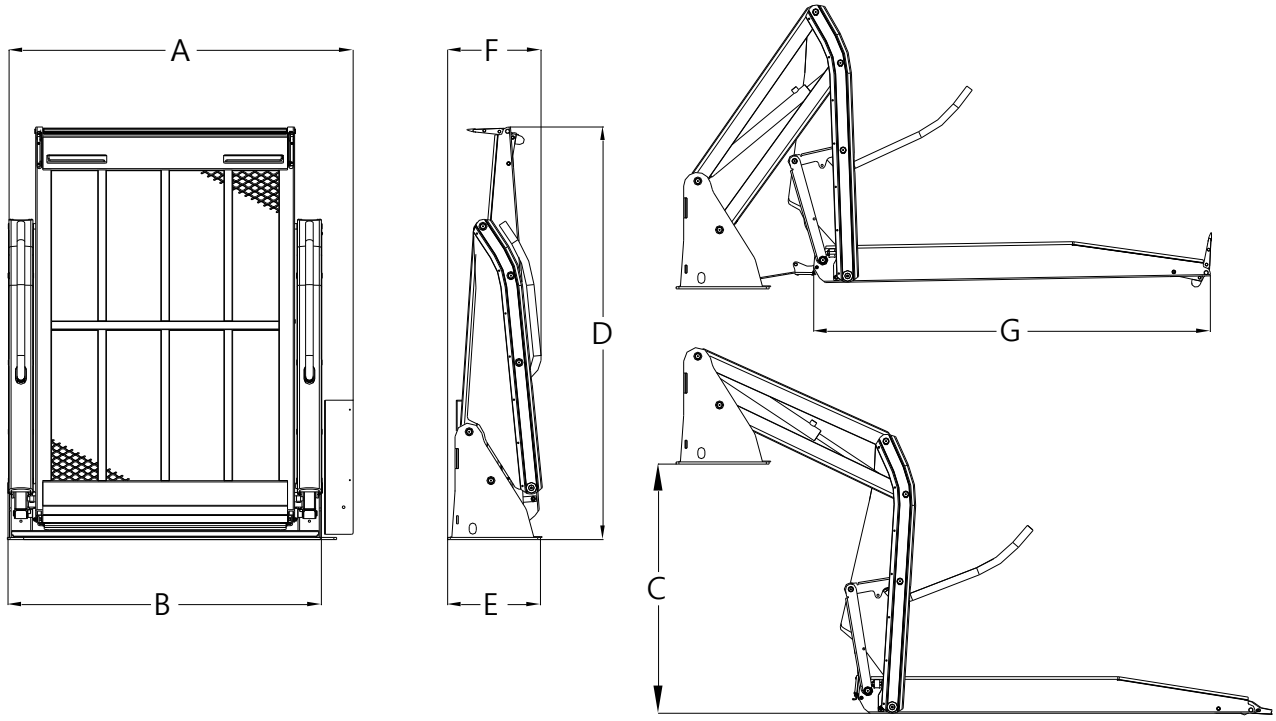


| | BAS 1150 | BAS 1395 | BAI 1401 |
|---|---|---|---|
| **A** | 1070.50 | 1168 | 1268 |
| **B** | 957.50 | 1053 | 1153 |
| **C** | 900 | 920 | 920 |
| **D** | 1137 | 1182 | 1523 |
| **E** | 341.50 | 342 | 341.50 |
| **F** | 392 | 397 | 349 |
| **G** | 1120 | 1400 | 1400 |

The drawing shown represents all models: BAS - BAI

## 2.3 TECHNICAL DATA

| | | BAS 1150 | BAS 1395 | BAI 1401 |
|---|---|---|---|---|
| Capacity | Kg | 350 | 350 | 350 |
| Weight | Kg | 88 | 96 | 99 |
| Power supply | Volt | 12-24 | 12-24 | 12-24 |
| Max. pressure | bars | 140 | 140 | 140 |
| Platform | mm | 1120x700 | 1400x800 | 1400x900 |
| Max. overhang | mm | 900 | 920 | 920 |
| Aux emergency pump | | YES | YES | YES |
| Airborne noise | Db(A) | < 70 | < 70 | < 70 |

## 3.1 INTENDED USE

The lift is designed for installation on the loading floor of a vehicle designed for transportation of the disabled in wheelchairs, within the limits of the performances and capacities indicated in the technical characteristics.

The lift must only be used by an authorised and trained operator, known as the accompanying person, who possesses the knowledge and physical requirements to safely perform operations with disabled persons.

## 3.2 IMPROPER USE

Anything that is not explicitly referred to in chapter 3.1 is considered **IMPROPER USE**.

IT IS FORBIDDEN to climb onto the lift or any of its parts and go up or down while standing.

IT IS FORBIDDEN to use the lift to transport animals or objects.

IT IS FORBIDDEN to use the lift with the vehicle not parked on a flat surface.

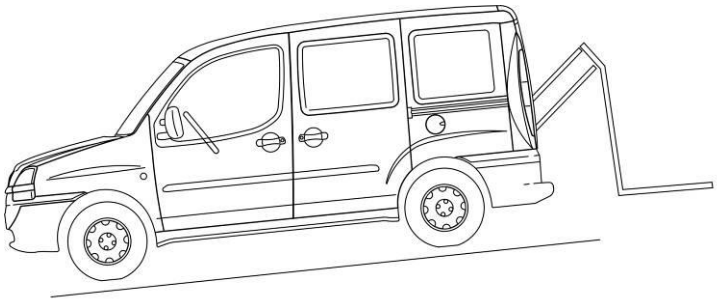

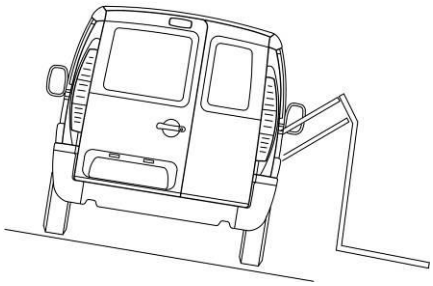

**THE MANUFACTURER DECLINES ALL RESPONSIBILITY FOR DAMAGE CAUSED TO PERSONS OR PROPERTY OR TO THE LIFT ITSELF DUE TO ANY USE OTHER THAN THAT DESCRIBED IN THIS MANUAL.**

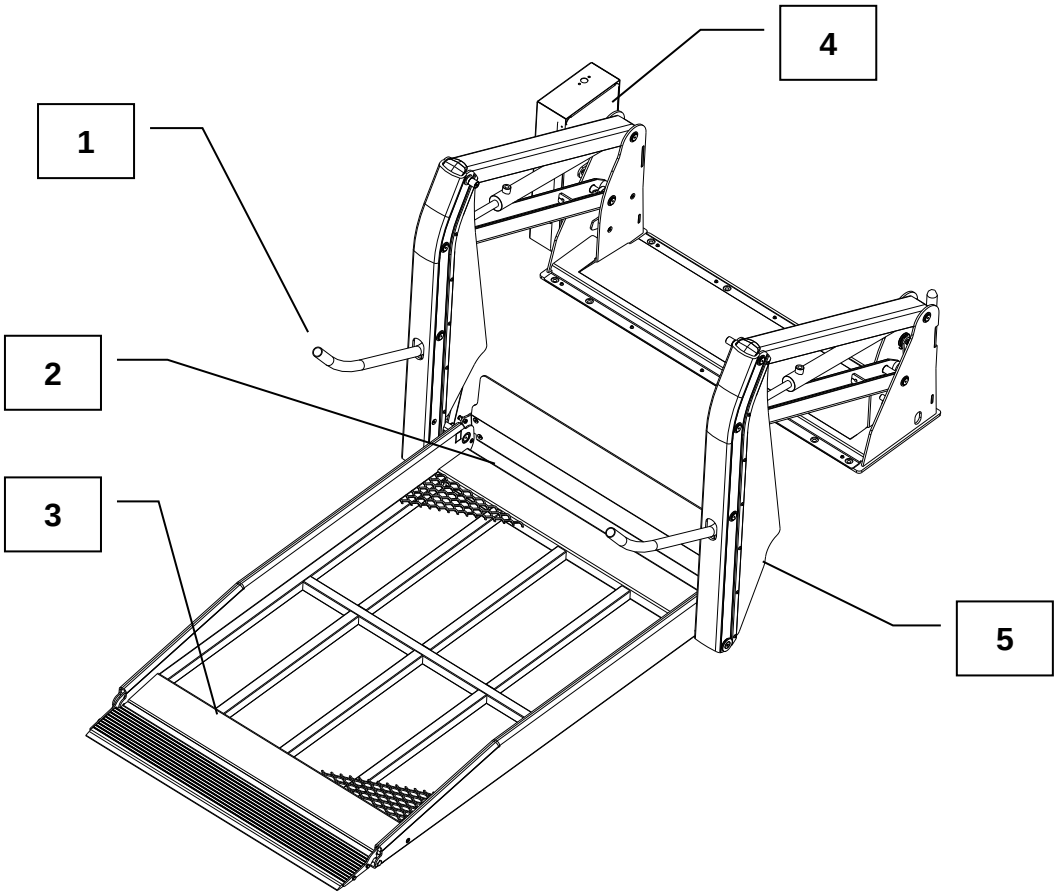


| | |
|---|---|
| **1** | Gripper handles for the disabled passenger |
| **2** | Internal stop flap |
| **3** | Load and stop flap for lifting |
| **4** | Hydraulic power unit safety devices:<br>a) Overload limit valve<br>b) Anti-tipping pressure switch |
| **5** | Guard |

**IT IS FORBIDDEN TO ELIMINATE, REMOVE OR TAMPER WITH THE EXISTING SAFETY SYSTEMS.**

The anti-tipping pressure switch prevents the platform from closing when occupied by a wheelchair.

THE LIFT HAS THE FOLLOWING MARKINGS

| | |
|---|---|
| | Do not lubricate, clean or adjust the device while moving |
| | Do not remove the guards |
| | Risk of crushing |

IT IS FORBIDDEN TO TAMPER WITH/REMOVE THE MARKINGS.

## 6.1 RECEIPT AND INSPECTION

On receipt of the lift, you must perform the following inspections:

- Check that the supply corresponds to the specifications ordered and the transport document.
- Check that the packaging is intact and that no parts have been broken or damaged during transportation.
- Carefully check that the devices have not been damaged during transportation and that no parts have been removed and/or tampered with.
- Check that all documentation necessary for installation has been provided.

**IF THE DELIVERED DEVICE DOES NOT COMPLY WITH THESE REQUIREMENTS, NOTIFY THE MANUFACTURER IMMEDIATELY.**

## 6.2 STORING AND NON-USE OF THE LIFT

If the lift is not used, proceed as follows:

- Store the lift in a sheltered area away from atmospheric agents.
- All electrical / electronic parts must be kept wrapped to protect from humidity.
- The storage temperature must be between +5°C and +50°C.
- All sliding parts (guides, cylinders…) must be protected from dust and rust.
- Do not store for over 6 months. For longer periods of storage, before putting into service contact the manufacturer to have the lift conditions inspected.

**STORAGE OF THE LIFT IN CONDITIONS THAT DO NOT COMPLY WITH THE ABOVE DESCRIPTION SHALL NULLIFY THE WARRANTY FOR ANY PARTS TO BE REPLACED.**

## 6.3 TRANSPORT

The lift must be transported using a vehicle (van, lorry, etc.) of an appropriate size and capacity.

The lift is shipped by the manufacturer packaged in a cardboard box or wooden crate anchored to a wooden pallet.

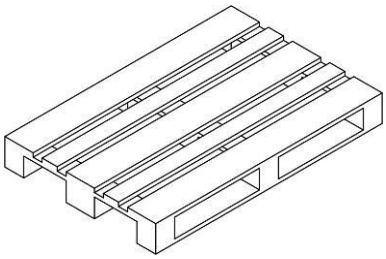

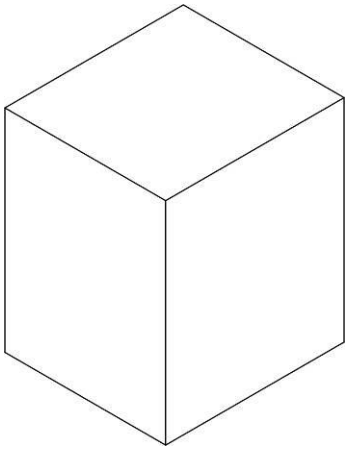

| \ | PALLET | VOLUME CC | CARTON PALLET | VOLUME CC |
|---|---|---|---|---|
| 1 model BAS 1150 | 50x130x140 | 910 | 45x120x140 | 756 |
| 2 models BAS 1150 | 80x120x140 | 1344 | - | - |
| 1 model BAS 1395 | 50x130x140 | 910 | 45x120x140 | 756 |
| 2 models BAS 1395 | 800x120x140 | 1344 | - | - |
| 1 model BAI 1401 | 50x130x165 | 1072 | 80x120x165 | 910 |
| 2 models BAI 1401 | 80x120x165 | 1584 | - | - |

For the weight of each model, refer to the Technical Data chapter

## 6.4 HANDLING

The packaged lift must be handled by a transpallet, fork lift truck, etc.

The means used for safe handling must have a load capacity suited to the load to be transported (see weight indicated in the Technical Data table).

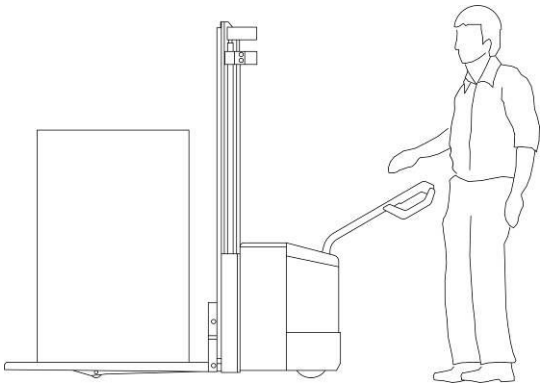

**HANDLING STAFF MUST WEAR: SAFETY SHOES WITH STEEL TOE CAP AND NON-SLIP SOLES.**

**MAKE SURE THAT NO UNAUTHORISED PERSONS ARE STANDING WITHIN THE RADIUS OF ACTION OF THE LIFTING/HANDLING MEANS (FORK LIFT TRUCK, TRANSPALLET, ETC.) DURING THE LIFTING, TRANSPORT AND HANDLING OPERATIONS.**

If a cardboard box has been used for packaging, to unpack the lift, cut the cardboard packaging with a stanley knife (max. blade length 1 cm) on the 4 sides of the base of the packaging, then lift and remove. Otherwise, if a wooden crate has been used, remove the nails from the wooden crate starting from the top and then remove the side walls.

**STAFF REMOVING THE PACKAGING MUST WEAR: SAFETY SHOES WITH STEEL TOE CAP AND NON-SLIP SOLES AND GLOVES.**

## 6.5 INSTALLATION ON A VEHICLE

Installation on a vehicle must be performed exclusively by Autolift staff or authorised installers.

Autolift declines all liability to damage to persons, property or the machine due to installation on a vehicle not performed by authorised persons.

## 7.1 NORMAL USE

The AUTOLIFT SKY electro-hydraulic lift control is a wired portable remote control known as push-button panel, equipped with two round protruding buttons indicating the two operating states.

The fundamental purpose of the push-button panel is to control the four distinct lift operations (open - down - up - close) in just two control buttons.

This is done by a special electrical system which uses a timer-operated consent technology. Simply and safely it prevents you from having to change button for every different lift movement and from entering the wrong command.

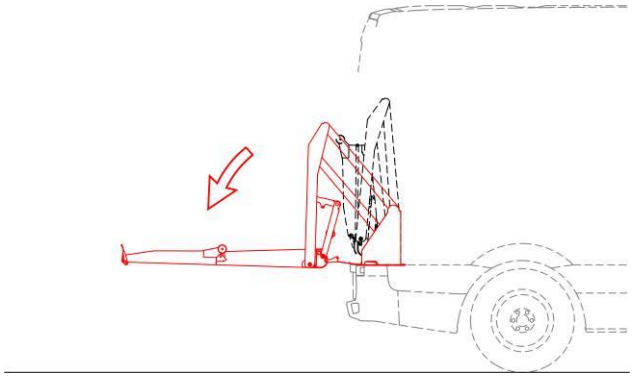

Hold down the lower button (down arrow) and the lift opens from the vertical stowage position to rest in a horizontal position parallel to the floor of the vehicle it is installed on.

After opening, the lift stops automatically.

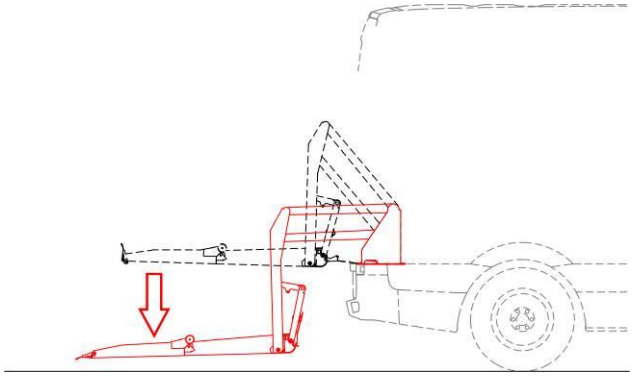

To lower the lift to the ground, press the down arrow button again: the platform descends slowly to the ground (the anti-roll device lowers automatically when the platform touches the ground).

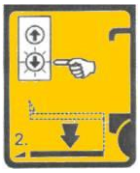


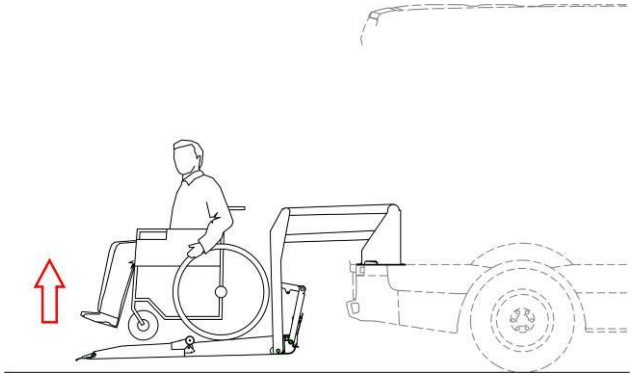

To raise the lift, press and hold down the button with the up arrow, in the upper part of the push-button panel.

The anti-roll device rises automatically when the platform lifts off the ground.

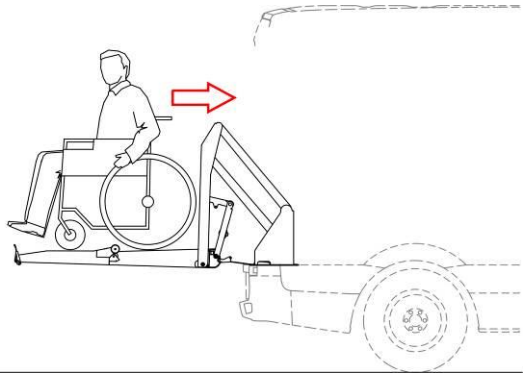

The lift stops automatically when it reaches the height of the floor of the vehicle.

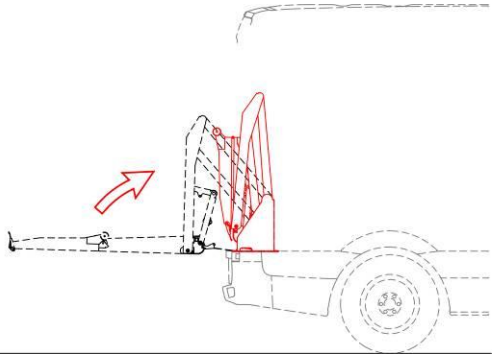

To stow the platform in the vertical position in the installation compartment press the button with the up arrow again.

## 7.2 USE IN EMERGENCY CONDITIONS

### 7.2.1 UP - CLOSING

The back up manual pump is used to drive the hydraulic lift if there is no electric current.

The pump controls consist of the extension of the hydraulic lift platform lifting pump arm and the metal slide protruding from the hydraulic power unit casing.

To lift the platform, insert the pump arm extension (**1**) in the metal cylinder protruding from the hydraulic power unit (**2**).

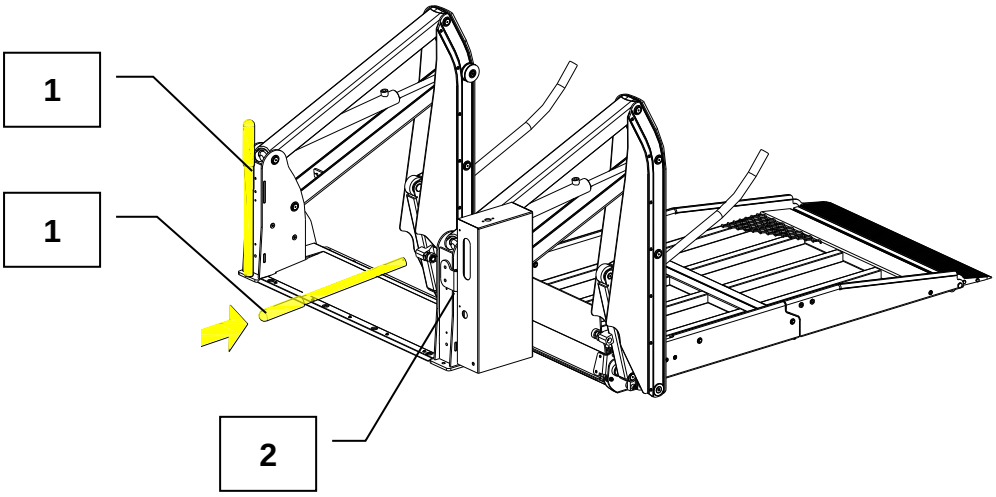


Move the arm alternately up and down (**3**) to raise the platform to the point of full closure.

After the operation, replace the extension (**1**) in the housing and contact your Autolift agent or authorised installer.

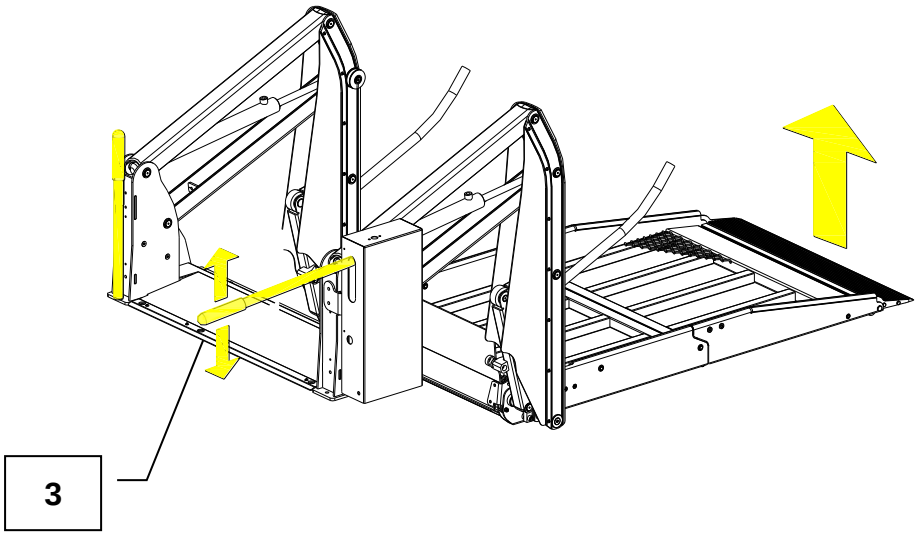

### 7.2.2 OPENING - DOWN

To open and lower the platform using the manual hydraulic release pipe (**2**), use the emergency metal slider, again with the manual pump extension (**1**).

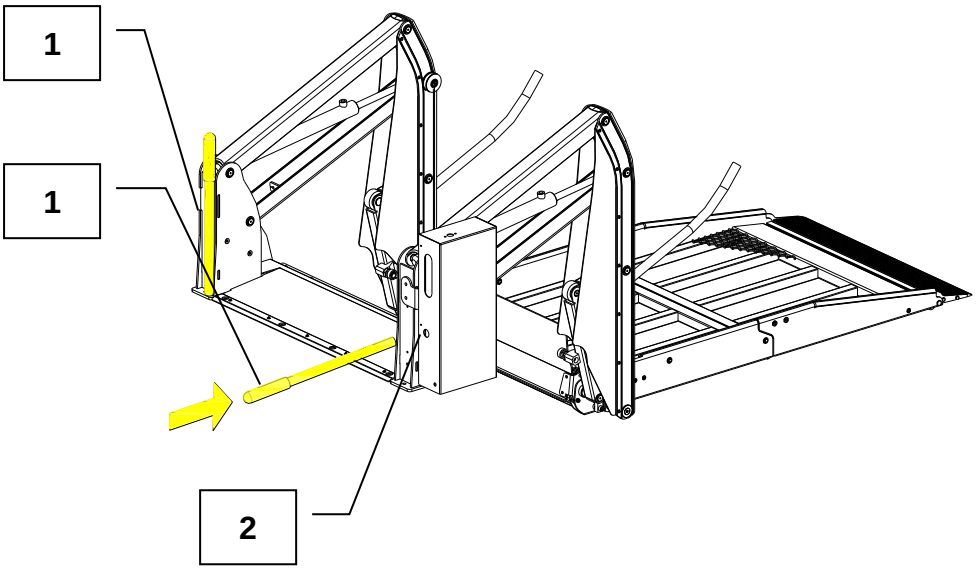


The extension has a plastic cap on one end and a specifically milled section on the other end.

3. To open and lower the platform, turn the extension anti-clockwise.
4. After completing the operation, close the open pipe by turning the extension clockwise, and use the lever to raise and close the platform.

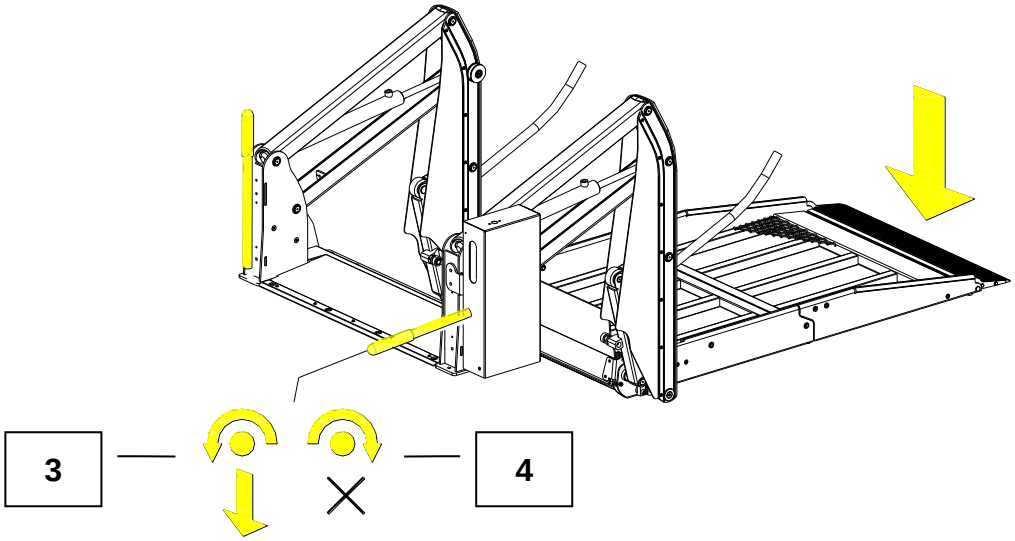

The lift must be cleaned by hand using a cloth soaked in non-aggressive detergent and then rinsed with a cloth dampened with water.

**DO NOT USE AGGRESSIVE DETERGENTS.**
**DO NOT USE WATER JETS OR HOT WATER JET CLEANERS.**

## 9.1 PERIODIC INSPECTION

**PERIODIC INSPECTIONS MUST ONLY BE PERFORMED BY SUITABLY QUALIFIED PERSONS.**

Every 12 months the user must have the lift inspected by a suitably qualified technician.

The inspections consist of a visual inspection to check the:

1. Load-bearing frame;
2. Lifting mechanism and relative couplings;
3. Controls;
4. Safety devices;

The inspections must also include:

1. Operating tests;
2. Maintenance;
3. Adjustments.
4. Every periodic inspection must include a load test with (1) lifting cycle at maximum load (simulated).

Any comments concerning the safety of the lift must be recorded in a specific register (see enclosed facsimile) which the user must keep safely for reference in the event of an incident.

The inspection records must also include the following information:

- Inspection date;
- ID details and serial number of the inspected lift;
- Next inspection date;
- Identification and signature of the person responsible for the inspection.

If the periodic inspection highlights any defects, signs of wear or other damage which could compromise the safety of the lift. In the event of an immediate safety hazard, the user must place the lift out of use until the fault has been eliminated.

Defects or damages must be reported to the manufacturer AUTOLIFT srl which will take any appropriate measures.

## 9.2 FREQUENCY OF CONTROLS

| Operation | Frequency | | |
|---|---|---|---|
| | Daily | Monthly | Yearly |
| Frame check | ✓ | | |
| Operation check | ✓ | | |
| Controls check | ✓ | | |
| Oil level check | | | ✓ |
| Emergency devices check | | ✓ | |
| Plates and labels check | | | ✓ |
| Joints check | | ✓ | |
| Wiring check | | ✓ | |

When disposing of the machine, comply with the procedures imposed by the law in force.

Generally the machine should be disassembled to group homogeneous materials together.

Specific materials such as lubricants, electrical / electronic components, must be disposed of according to specific laws.

**YOU MUST DESTROY THE MACHINE ID PLATES AND ALL OTHER CONNECTED DOCUMENTS.**

The troubleshooting table below helps to rapidly solve any operating faults.

For any malfunctions that are not listed below or are due to mechanical and/or hydraulic breakages, contact your nearest authorised service centre.

| ANOMALY | FAULT | REMEDY |
|---|---|---|
| The warning light in the cab does not come on | Power switch to OFF | Turn the switch to ON |
| | Hydraulic power unit fuse open | Reset the fuse |
| | Main power fuse blown | Replace the main power fuse |
| | Cab warning light broken | Replace the cab warning light |
| | Electronic control unit fuse blown | Replace the electronic control unit fuse |
| The platform does not open | Push-button panel not correctly connected | Correctly connect the push-button panel |
| | Intermittent power on the solenoid line | Restore continuous power to the solenoid line |
| | Lowering valve solenoid broken | Replace the lowering valve solenoid |
| | Hinges locked (models SKY and BBW) | Oil and grease |
| | Lowering valve broken | Replace the lowering valve |
| | Push-button panel broken | Replace the push-button panel |
| | Electrical control unit broken | Replace the electrical control unit |
| The platform movement is not aligned | Cylinder valve locked | Clean off any dirt |
| | Cylinder gasket damaged | Replace the gasket |
| | Hydraulic cylinder rod bent | Replace the cylinder |
| The platform does not stop at the loading surface when opening (item 9 in list of components) | Micro M1 not connected correctly | Correctly connect the control wire |
| | Intermittent power on the micro M1 line | Restore continuous power to the micro M1 line |
| | Micro M1 cam not adjusted correctly | Correctly adjust the micro M1 cam |
| | Micro M1 broken | Replace the micro M1 |
| The platform does not descend | Push-button panel not correctly connected | Correctly connect the push-button panel |
| | Intermittent power on the solenoid line | Restore continuous power to the solenoid line |
| | Lowering valve solenoid broken | Replace the lowering valve solenoid |
| | Lowering valve broken | Replace the lowering valve |

| ANOMALY | FAULT | REMEDY |
|---|---|---|
| | Push-button panel broken | Replace the push-button panel |
| | Electronic control unit broken | Replace the electronic control unit |
| The platform descent is not properly controlled | Lowering valve screw not tight | Close the lowering valve |
| | Lowering valve broken | Replace the lowering valve |
| The platform does not rise | Lowering valve screw not tight | Close the lowering valve |
| | Lowering valve broken | Replace the lowering valve |
| | Electro-pump remote switch broken | Replace the electro-pump remote switch |
| | Electro-pump broken | Replace the electro-pump |
| | Push-button panel broken | Replace the push-button panel |
| | Electronic control unit broken | Replace the electronic control unit |
| | Insufficient battery charge | Charge the battery |
| | Dirty earth connection | Clean the earth connection |
| | Hydraulic power unit broken | Replace the hydraulic power unit |
| | Max. speed control at excessively low levels | Calibrate the speed to an appropriate level |
| The platform does not stop at the loading surface when rising | Micro M1 not connected correctly | Correctly connect micro M1 |
| | Intermittent power on the micro M1 line | Restore continuous power to the micro M1 line |
| | Micro M1 cam not adjusted correctly | Correctly adjust the micro M1 cam |
| | Micro M1 broken | Replace the micro M1 |
| The platform does not close | Lowering valve screw not tight | Close the lowering valve |
| | Pressure switch not correctly calibrated | Correctly calibrate the pressure switch |
| | Lowering valve broken | Replace the lowering valve |
| | Electro-pump remote switch broken | Replace the electro-pump remote switch |
| | Electro-pump broken | Replace the electro-pump |
| | Push-button panel broken | Replace the push-button panel |
| | Electronic control unit broken | Replace the electronic control unit |
| The platform does not close completely | Pressure switch not correctly calibrated | Correctly calibrate the pressure switch |
| | Max. speed not correctly calibrated | Recalibrate the max. speed |

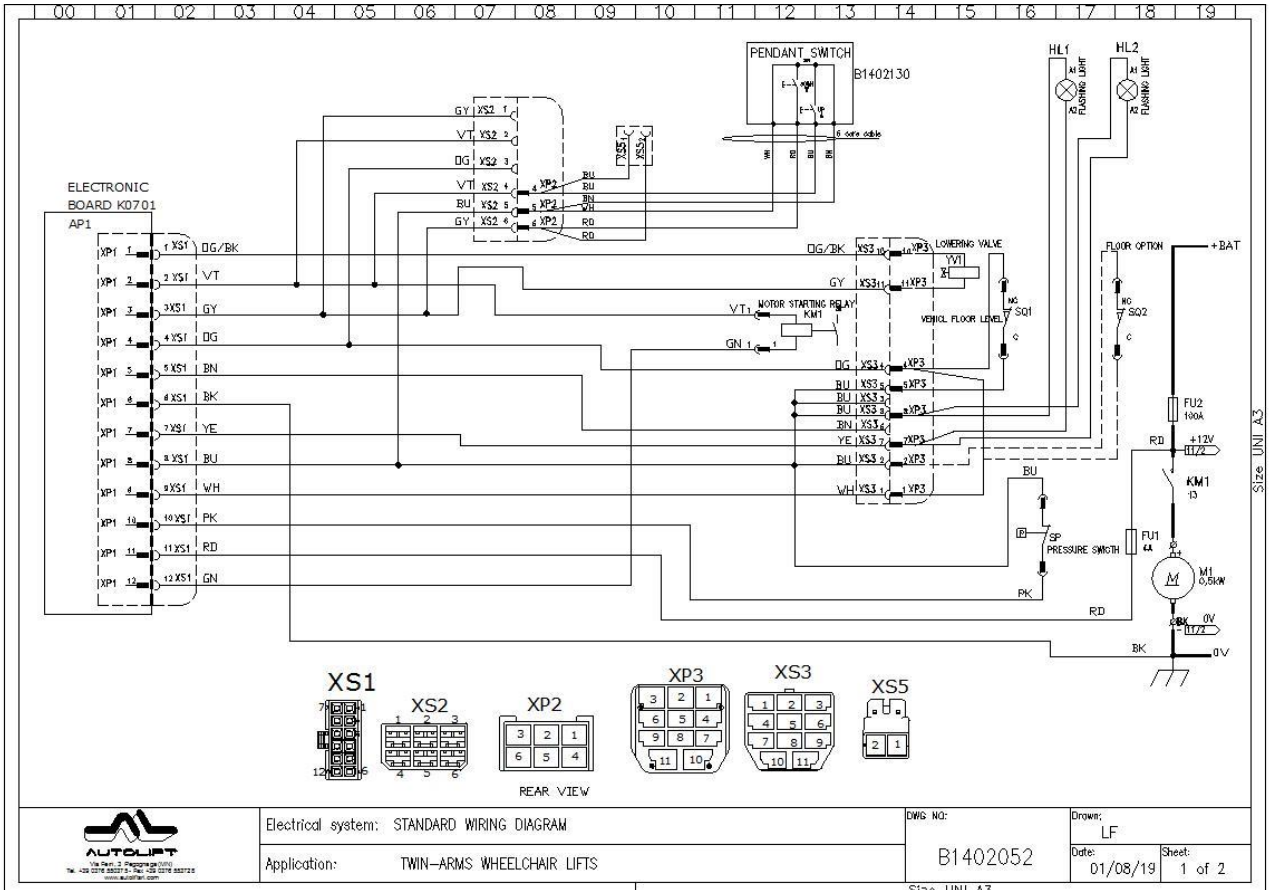


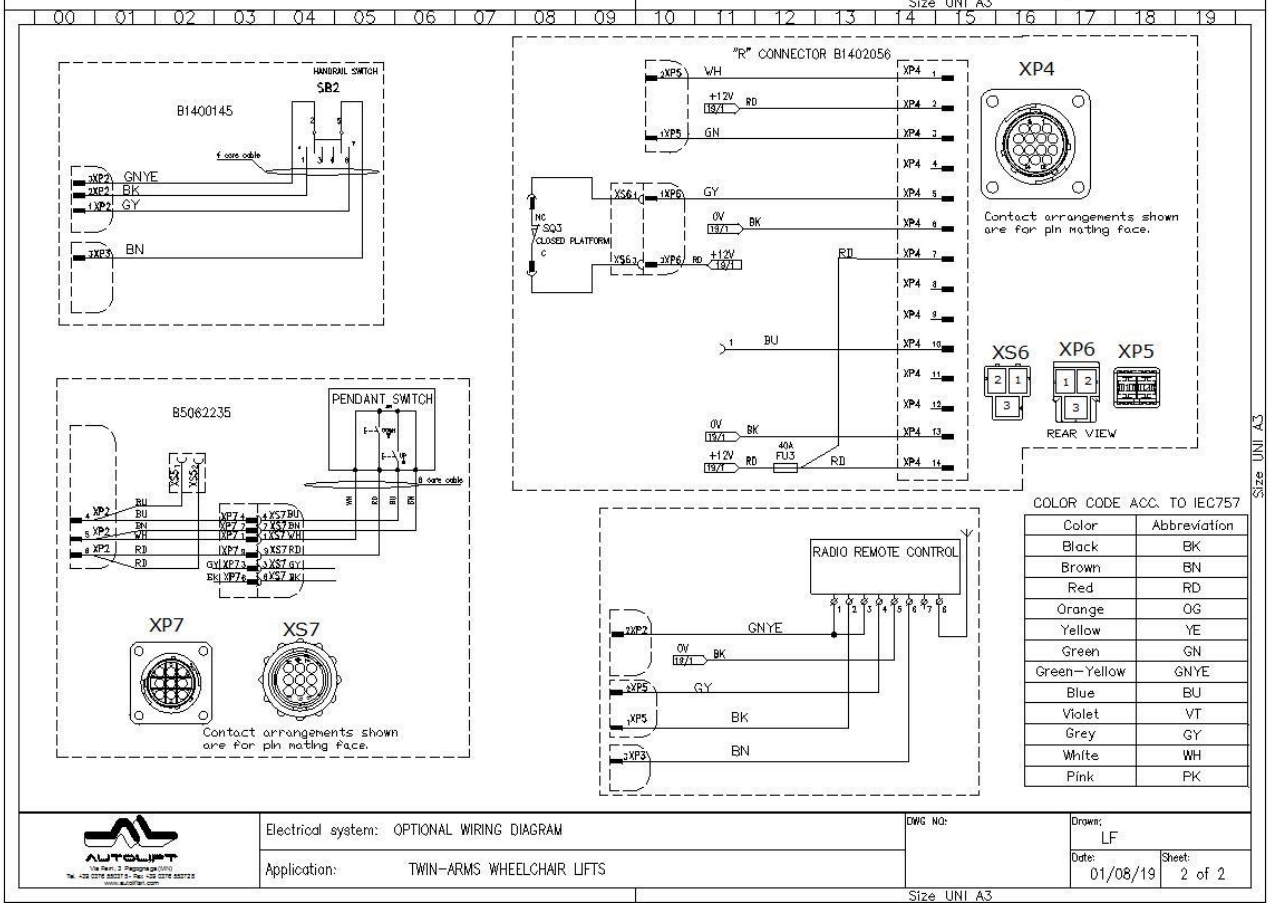


| Color | Abbreviation |
|---|---|
| Black | BK |
| Brown | BN |
| Red | RD |
| Orange | OG |
| Yellow | YE |
| Green | GN |
| Green-Yellow | GNYE |
| Blue | BU |
| Violet | VT |
| Grey | GY |
| White | WH |
| Pink | PK |

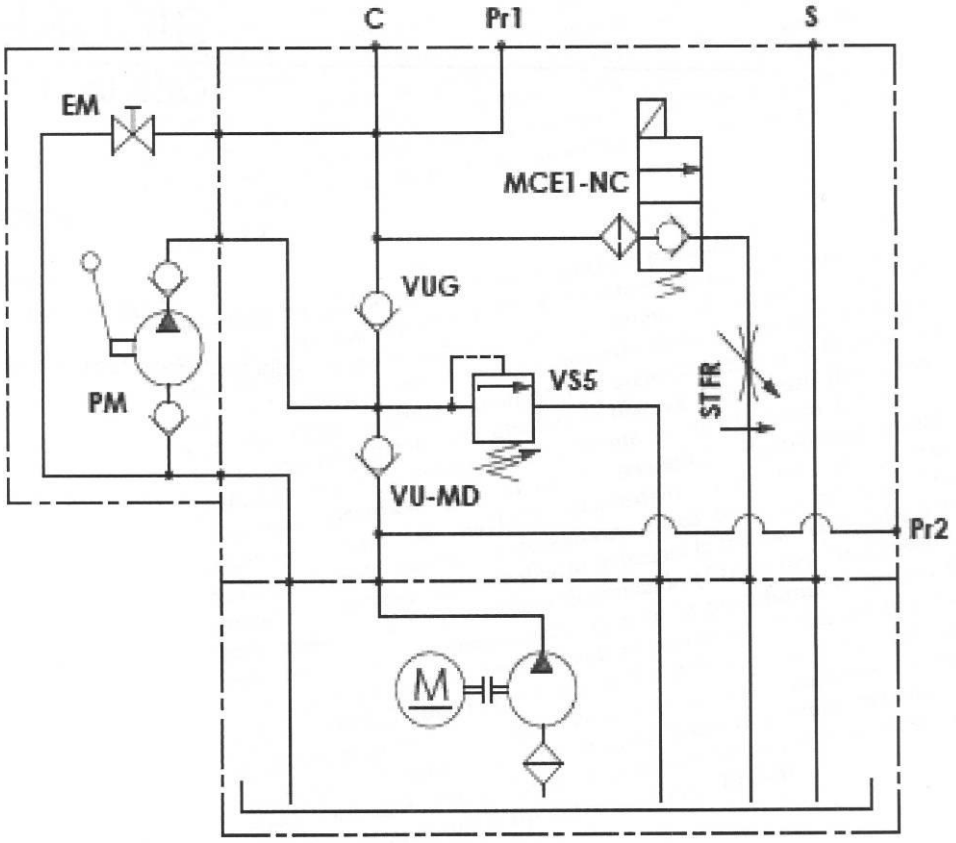
C
Pr1
S
EM
MCE1-NC
VUG
PM
VS5
ST FR
VU-MD
Pr2
M

For spare parts, contact the Autolift Srl spare parts department by submitting the following form.

# SPARE PARTS REQUEST FORM

| | | | |
|---|---|---|---|
| **FROM** | | **Mr.** | |

SPARE PARTS DEPARTMENT

**Fax +39 (0)376 553728 – mail: info@autoliftsrl.com**

| DESCRIPTION | Qty |
|---|---|
| | |
| | |
| | |
| | |
| | |
| | |
| | |
| | |
| | |
| | |
| | |
| | |
| | |
| | |
| | |
| | |
| | |
| | |

| | | | |
|---|---|---|---|
| **PRIORITY** | URGENT ☐ | NORMAL ☐ | |
| **SHIPMENT** | | | |
| **PAYMENT** | | | |
| **DESTINATION** | | | |
| | SIGNATURE | DATE | |